XVIII IMEKO WORLD CONGRESS
Metrology for a Sustainable Development
September, 17 – 22, 2006, Rio de Janeiro, Brazil

PRECISION MEASUREMENT OF LOW AC VOLTAGE IN WIDE BAND WITH COMPOSITE AMPLIFIER

Zdenek Havranek [1]

[1]Department of Control and Instrumentation, Brno University of Technology, Brno, Czech Republic, havranekz@phd.feec.vutbr.cz

Abstract: The paper describes theoretical design and simulation results of the high precision amplifier for use in metrology especially for measurement of low AC voltage in a wide frequency range. The whole device will be used in process of calibration of common multimeters with AC/DC comparation technique.

Keywords: composite amplifier, AC voltage measurement, calibration instrumentation.

1. INTRODUCTION

Common multimeters usually need the calibration for voltage ranges from 1 mV higher in a frequency range of DC to 1 MHz. Very accurate measurement of AC voltage is needed and is offered by the AC/DC comparation method. It means that we compare heating of temperature sensitive element, usually thermocouple, created by the AC and DC signal with the known DC signal which determines the value of AC signal. For proper function of comparation method, the input voltage signal of 1 mV_{rms} must be gained by 400 times in a frequency range from DC to 1 MHz.

It puts opposed requirements on the amplifier [1]. The amplifier has to be DC accurate with high and constant input impedance, low output impedance, low noise, frequency independent gain from 0 to 1 MHz, input overvoltage protection, enough output power for driving the thermocouple and short circuit protection to prevent its destroying. This opposed requirements can't be fulfilled by simple amplifier. The high gain amplifier in wide bandwidth with also very high precision up to 1 MHz and stable operation can't be constructed directly without any previous good simulation results obtainable in real design.

2. PURPOSE OF THE PAPER

The main objective of this paper is to design special amplifier to achieve the requiered parameters not far from ideal. There is huge range of various amplifiers optimalized for many special purposes on the market, but there is no chance to optimize the whole parameters together. That's why the amplifier for thermocouple conversation method must be designed as a composite amplifier with several blocs and then it can provide the best final parameters. The bloc diagram of the whole amplifier with all parts mentioned above is on the figure 1.

From the bloc diagram, one can see direct signal path which provides very high open-loop gain in wide bandwidth up to 1 MHz. The global feedback path is divided into two parts, AC feedback directly connected into wide bandwidth amplifier and DC feedback processed with choppered amplifier.

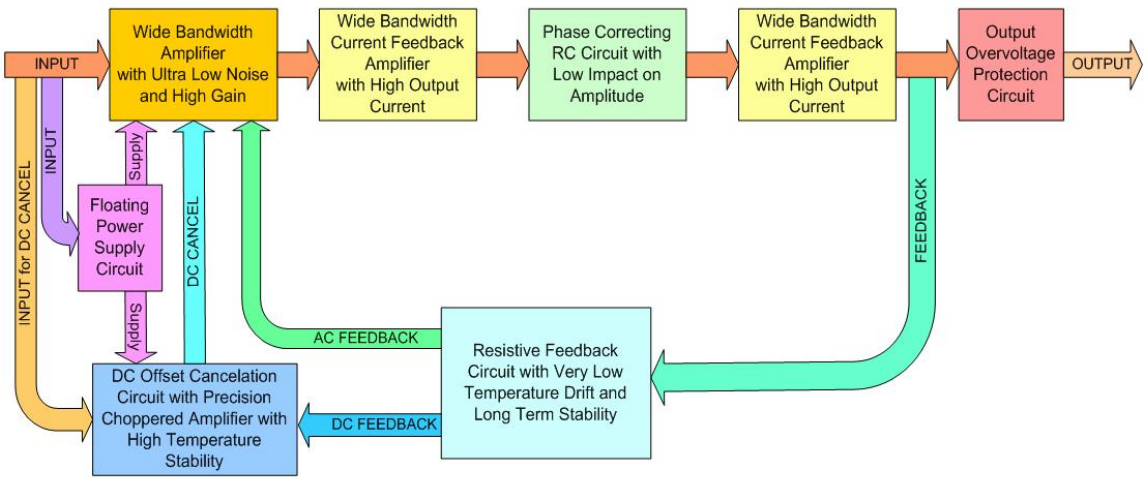

Fig. 1. Bloc diagram of the designed composite amplifier

2. DESIGN OF IMPORTANT PARTS

2.1. DC offset cancelation circuit

Global DC accuracy can be achieved by using operational amplifier (OA) with sample and hold capacitors integrated on the chip, so-called chopper amplifier. It provides minimal DC offset and drift, but for its higher noise it is not suitable for wider frequency range. Because of these limitations, it can be used only as a paralel branch which adjusts DC parameters of the selected wideband amplifier.

There are two ways, how to stabilize the DC offset for the direct signal path, which consist of wideband amplifier and current-feedback amplifiers.

The first one is to divide the global feedback into DC and AC part, where the DC part comes through chooper stabilized OA. Disadvantage of this solution is interference into global feeedback, where the connection between low-band signals, come from chopper OA, and mid- and high-band signals directly processed by wideband amplifier could be done very precisely. Because in the point on the frequency characteristic, where both signal paths acting together, there is usually small ripple caused by small phase angle between chopper OA output and direct feedback signal.

The second way of DC stabilization is adjusting the DC offset of the wideband amplifier directly into its DC offset triming pins. This precondition for the wideband amplifier limits total amount of available OAs.

As the appropriate OA for DC cancelation circuit, due to mentioned requierements, LTC1050C has been choosen [2]. The local frequency dependant feedback reduces the total bandwidth of the whole DC stabilization circuit to 0.05 Hz. The key parameters of LTC1050C are very low offset voltage of 0.5 μV with low drift 0.01 μV/°C, voltage noise 0.6 $\mu V_{p\text{-}p}$ (DC – 1 Hz) and internal sampling frequency 2.5 kHz.

2.2. Wideband transmission

The main problem is to achieve the stable and frequency independent gain in the whole frequency range. The combination of bipolar input stage of the OA with transconductance amplifiers with current feedback (CF) has been choosen due to limitations of classical amplifier to achieve stable gain in wider frequency range.

On the position of the wideband amplifier has been choosen operational amplifier LT1028AC [2], which has very good noise parameters (0.85 nV/srtHz), voltage gain of 35 dB at 1 MHz. This OA has also voltage offset trimming pins, thus it is suitable for DC cancelation directly into the offset trimming pins. In the design, this OA has no local feedback.

Two next amplification stages are equipped with current feedback amplifiers (CFAs) to achieve the requiered global gain in open-loop. As the appropriate parts for these stages has been tried several OAs. Main requirement for the selection of OA is very wide bandwidth with good stability at higher gains. This quality has OA OPA695 (manufacturer Burr-Brown), LT1227 (Linear Technology), HFA1120 (Intersil) and some other. OPA 695 and HFA1120 have unity-gain bandwith of about 1.4 GHz and LT1227 has 140 MHz. But OPA695 hasn't DC offset trimming pins, while HFA and LT have. This requirement has been considered after simulations and some practical design with CFAs, where the most of current feedback amplifiers have high input offset voltage (in mV levels) and without strict local DC feedback, they staturate. In this design, it is important to have high gain at low and mid-range frequencies to achieve low phase shift (from 0°) at high frequencies with low gain. From these requirements, the best choice is Intersil HFA1120. In the draft version of design, there was considered usage of OPA695, but its limitation is imposibility of local DC offset trimming.

The stage with CFA has also local frequency dependent feedback to ensure low phase shift at high frequencies, as mentioned above. The local feedback has cut-off frequency at 1 MHz with following -40 dB per decade slope of the amplitude frequency characteristic and then constant gain of 10 dB (slope of 0 dB per decade with cut-off frequency about 15 MHz). This arrangement has a big advantage with phase shift of only -15° at frequency about 35 MHz, where the whole composite amplifier is designed with a gain of 1. So it is a good prerequisite for global stability. Amplitude and phase frequency charactaristic of the one stage with CFA HFA1120 is in the figure 2.

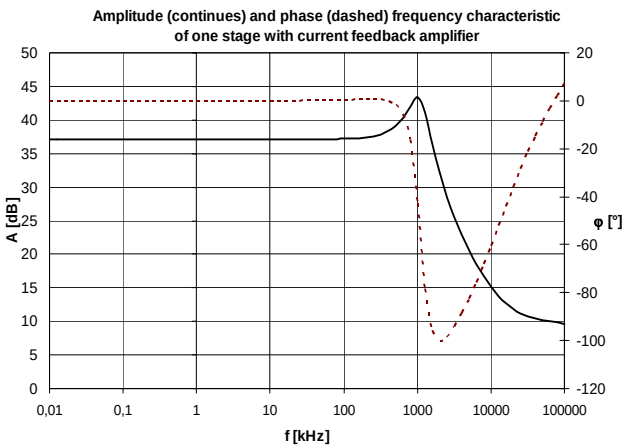

Fig. 2. Amplitude and phase frequency characteristics of one stage with current feedback amplifier

2.3. Achieving the stability of the whole circuit

With respect to the assignment, where we need the gain of 400 at frequency of 1 MHz with enough strong feedback, using of only one CF amplifier is insufficient. The whole amplifier with LT1028 and one stage with

CFA can't fulfil the requirement about high open-loop gain at high frequency (about 1 MHz).

Because of it, two CF amplifiers have been used. To preserve the stability of the system the special phase correcting circuit [3] with T-cell shape has been designed. Used correction circut (overbridged T-cell) has negligible impact on the open-loop gain at low and mid-range frequencies, but its main task is to correct the phase to stabilize the gain in the closed-loop at high frequencies about 35 MHz. The simplified schematic of the forward signal path circuit for wideband transmission is in the figure 3. Stages with CFA is simplified, they have frequency dependent local feedback (not only resistive).

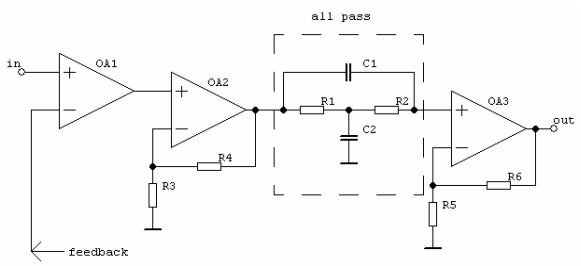

Fig. 3. Simplified schematic of the forward signal path with two CF amplifiers (OA2, OA3) and phase correction circuit

One can see from the figure 4, that T-cell is tuned to 10 MHz, where the slope of the amplitude frequency characteristic changes from -20 dB/decade to +20 dB/decade. The gain margin of this T-cell is about 70° (positive) at 35 MHz, which correct the phase shift of both CFA (each has about -15°) and also the phase shift of LT1028 at 35 MHz of about -200°. If all phase shifts are added, then the total gain margin at frequency, where open-loop gain is 1, is about +20° (the total phase shift of open-loop is -160°).

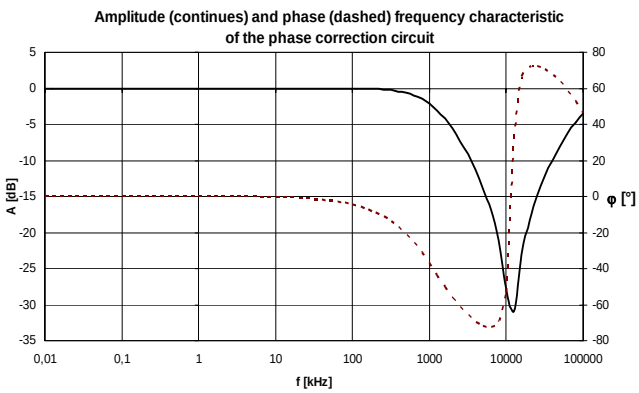

Fig. 4. Amplitude and phase frequency characteristics of the phase correction circuit (stabilization circuit)

Both stages with CFA and phase correction circuit between them have also another big advantage of very steep slope of amplitude frequency characteristic after cut-off at 1 MHz reaching -120 dB/decade. And if the gain margin in open-loop at 1 MHz is about 115 dB, then open loop gain at 10 MHz is close to 0 dB (really 6 dB) and about -20 dB at 100 MHz. This effect hasn't been considered in the draft design of the composite amplifier, thus all cut-offs has been designed in higher frequencies obtaining better global accuracy, but lower stability at high frequencies, high predisposition for self-oscilations and amplification of high-frequency spread spectrum.

2.4. AC input parameters – block of floating input stage of the amplifier

The choice of the input amplifier has the main impact on achieving the high input impedance and low input current. But amplifiers with these parameters have higher noise and they are adjusted to signal sources with higher internal impedance [1]. Therefore it is necessary to choose the input amplifier with bipolar transistor at the input which is noise adapted to low internal impedances of signal sources used in calibration.

The floating power supply of the input amplifier obtains better input parameters like higher input impedance concurently with wider frequency bandwidth. It is done by the common node of the supply voltage midpoint and the input of the first amplifier (virtual connection). This circuit also decreases the impact of the internal capacitance of the protection diodes which prevent the input overloading. The circuit diagram, which forms the floating midpoint of power supply of the input stage of the amplifier, is simplified outlined on the next figure 5.

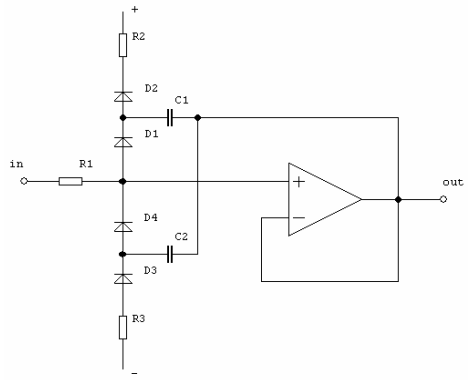

Fig. 5. Circuit for floating DC supply of first stage (wideband amplifier and DC cancelation circuitry)

As a suitable amplifier, which controls the floating power supply midpoint, has been choosen OA LT1097, which has low DC offset and drift [2]. It isn't a first-rate integrated circuit, but its parameters are sufficient, because it is not participating in amplification in the main branch.

2.5. Thermocouple overloading protection – output protection circuit with comparator

Overload protection of the thermocouple has been done by the classical way with comparator, which monitors overrun of the specific signal level and doesn't transmit the wrong signal level at the output [1]. The part of this circuit is an output follower with LT1128AC, which provides the sufficient accuracy at a gain of one (0 dB) and doesn't make the previously reached good results worse. Before this follower there is connected an

electronic switch, which disconnects the input of LT1128AC from previous circuits, when the output voltage overrun the specified level (exceeding of the allowed power load of the thermocouple), and preserves against of damage the thermocouple.

4. RESULTS

For examination the open-loop gain margine at frequency of 1 MHz figure 6 can be used. This figure expresses the global open-loop, closed-loop and only LT1028 gain. It's evident from amplitude frequency characteristic that the amplitude gain is enough at 1 MHz, roughly 115 dB (about 500 thousand), which provides good margin after the closing the feedback loop and so good prerequisition for high precision at these frequencies. The gain and phase margin in open-loop is evident from figures 6 and 7, where figure 6 is phase frequency characteristic of the whole amplifier (open-loop, closed-loop and LT1028 only). After closer look to the open-loop characteristics, the gain margin of 6 dB at 15 MHz and the phase margin of 18° at 35 MHz can be found.

After closing the global feedback loop, with very accurate resistors, we can reach the total gain of 400 (52 dB) and flat frequency characteristic of amplitude transfer function of closed-loop, as shown in the figure 6.

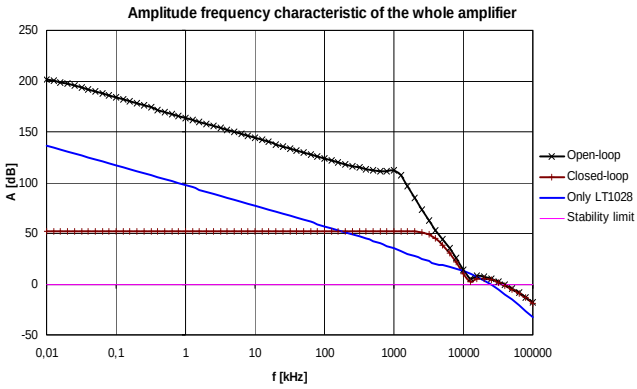

Fig. 6. Amplitude frequency characteristics of the whole composite amplifier (upper – open-loop, middle – only LT1028, lower – closed-loop) with highlited unity gain (stability limit 0 dB)

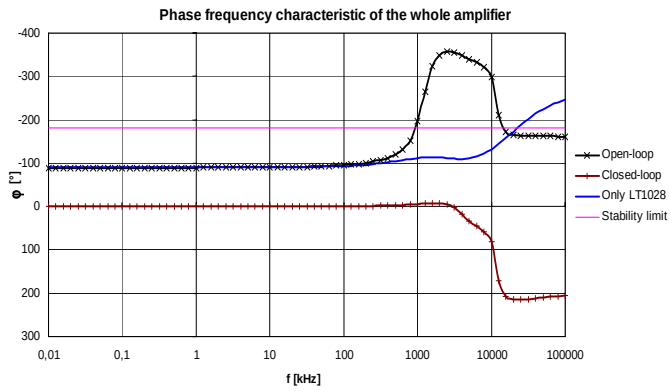

Fig. 7. Phase frequency characteristics of the whole composite amplifier with highlited stability limit -180°

The whole amplifier AC precision in the whole frequency range of 10 Hz to 1 MHz is presentated on next characteristic in the figure 8.

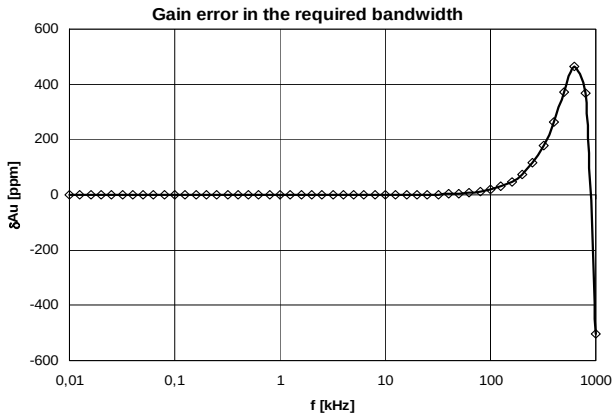

Fig. 8. AC gain error of the whole composite amplifier

Total precision of the designed wideband amplifier is about ±500 ppm for frequency range from DC to 1MHz. If one can reduce the bandwidth to 100 kHz, precision increased to ±20 ppm.

5. DISCUSSION

The simulation results support the designer's idea of high open-loop gain and stable closed-loop function. Also here could be some troubles with real construction due to high frequency operation and high gain in wide bandwidth. Setting of all important parameters and final selection of OAs could be different from proposed design, but this concept is realizable. Building of the first prototype of this amplifier is in progress and some blocs have been already tested, if they could ensure or approach the theoretical simulation results.

6. CONCLUSION

In this design, there were shown the real electronic parts (ICs), which could be used to construct the real amplifier with their important parameters, advantages and disadvantages. All main parts have been designed with respect to their impact on the whole accuracy and total parameters. There are also simulation results and verification of awaited parameters which define the overal precision and long term stability. The real prototype hasn't been prepared for testing yet, but it is in construction now.

REFERENCES

[1] S. Ďaďo, M. Kreidl, "Senzory a měřicí obvody", ČVUT, Praha, ISBN 80-01-01500-125X, 1996.

[2] Linear Technology, "Operational amplifiers [online]", accessible from www.linear.com, 2005.

[3] D. Eagar, "Application Note 67 – Using super opamps to push technological frontiers: An ultrapure oscillator", Linear Technology, 4 pages, 2002.